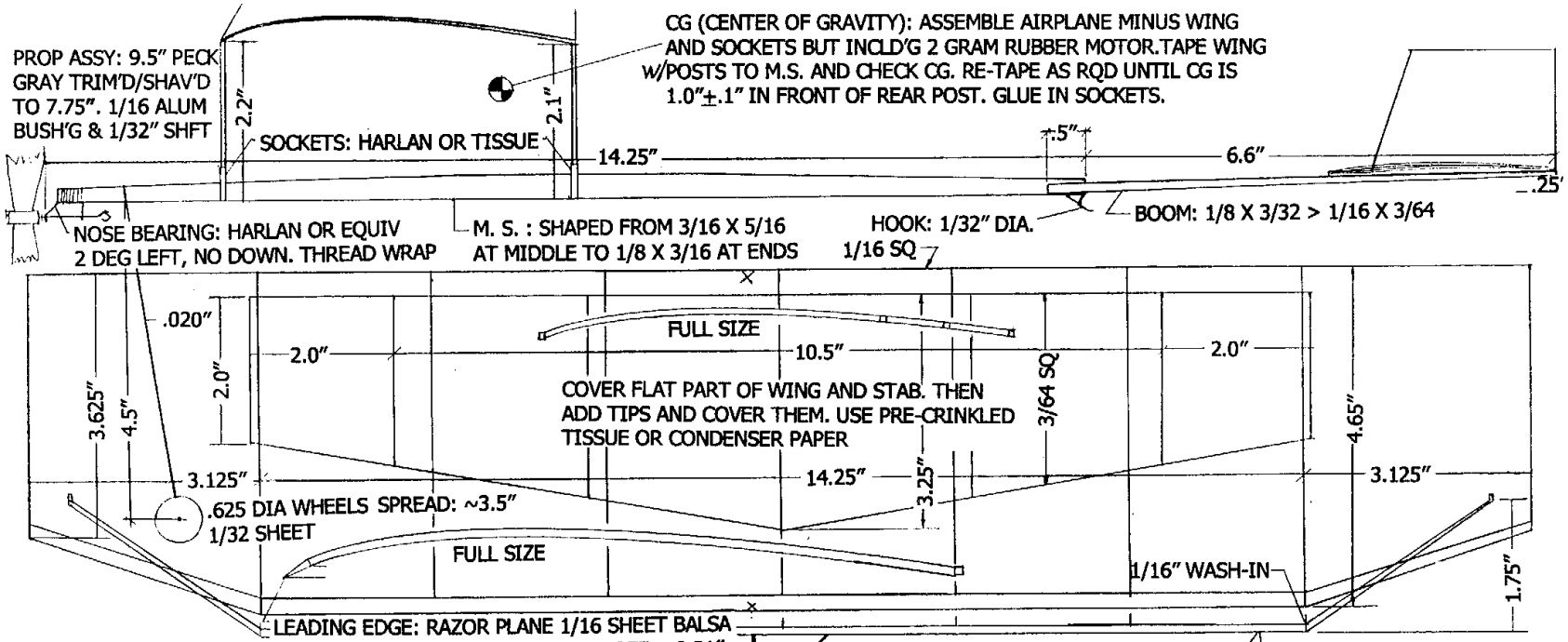

ADJUSTMENTS: CAN/SHOULD BE DONE AT HOME.
BEFORE FLYING, RECHECK ALL BUILT-IN ADJUSTMENTS:

1. CG IS CRITICAL. IF WRONG, FIX IT NOW! IT AFFECTS EVERYTHING ELSE; ESPECIALLY RECOVERY FROM UPSETS SUCH AS RAFTER BANGING OR COLLISIONS.
2. THRUST LINE: ~2 DEG LEFT, NO DOWN.
3. INBOARD WING WASH-IN: ~1/16" AT DIHEDRAL PT.
4. TAIL BOOM TILT UP AT TIP:~.25"
5. TAIL TILT: IN-BOARD SIDE ~ 3/8" HIGHER

TRIMMING/FLYING

USING A WINDER, PUT IN ABOUT 600 TURNS AND BACK OFF 200. HAND LAUNCH AT SHOULDER HEIGHT AND OBSERVE. YOUR GOAL IS A SMOOTH, SLOW "CRUISE" FLIGHT SPEED AND A LEFT CIRCLE OF ABOUT 25 FEET DIA. TWEAK (COERCE) BOOM UP OR DOWN AS NEEDED TO ACHIEVE SLOWEST SPEED W/O "MUSHING". FINE TUNE BY ADJUSTING POSTS IN SOCKET. CRUISE CIRCLE SIZE CAN USUALLY BE ADJUSTED BY TWEAKING THE BOOM SIDEWAYS AND/OR CHANGING STAB TILT. IF THAT DOESN'T DO IT, LEFT THRUST AND/OR WING WASH-IN MAY ALSO NEED TO BE CHANGED. FINALLY, DON'T PROCEED TO FULL OR NEAR FULL WINDS FLYING UNTIL "CRUISE" TRIMMING IS RIGHT.

BEST TIME: 26 FT CEILING 3:20
OCT 07, 2001 BALLASTED TO 10 GRAMS
COMPARATIVE TESTING (NOT EXHAUSTIVE) SEEMS TO GIVE THIS WING A 10-15 SECOND ADVANTAGE OVER STD SQUARE/RECT'GULAR LEADING EDGE WINGS. WING CONFIG ALSO RETRO-FITTED ONTO OTHER S.O. DESIGNS WITH SIMILAR IMPROVED RESULTS.

TARGET WEIGHTS	(GRAMS)
PROP ASSY	2.30
WING W/ COVER & POSTS	1.75
FUSE/BOOM/TAIL/L.G.	3.95
TOTAL: 2002 "C"RULES	8.00

FOR "B" RULES: REMOVE L.G. ADD BALLAST AND/OR BUILD HEAVIER TO WEIGH 10.0 GMS

"Leading Edge"

SO by Cezar Banks

SCALE 1" = 2"